| REVISION DATA | | | | |
|---|---|---|---|---|
| SYM | ECN | DESCRIPTION | DATE | APPROVED |
| | | | | |
| | | | | |

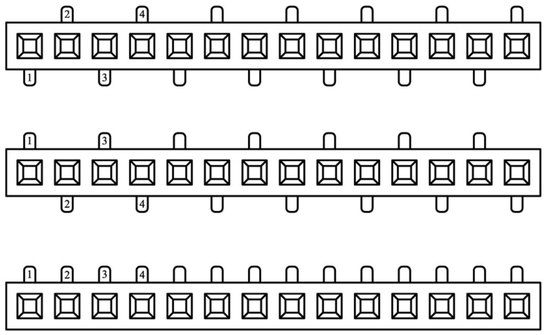


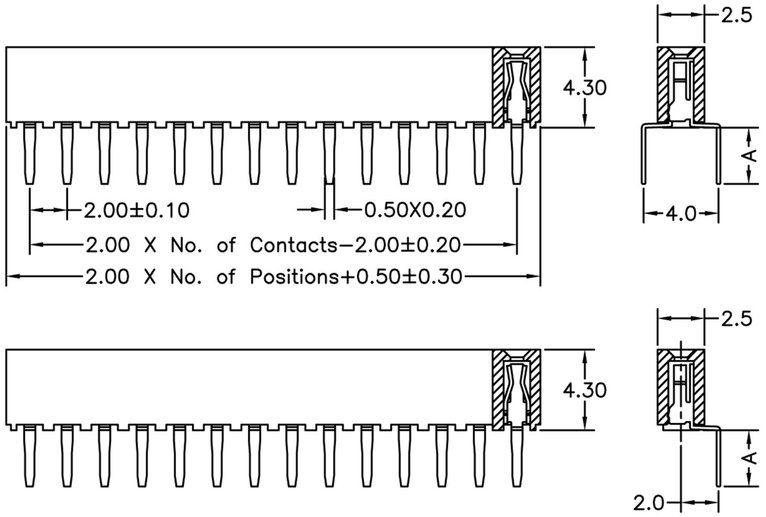


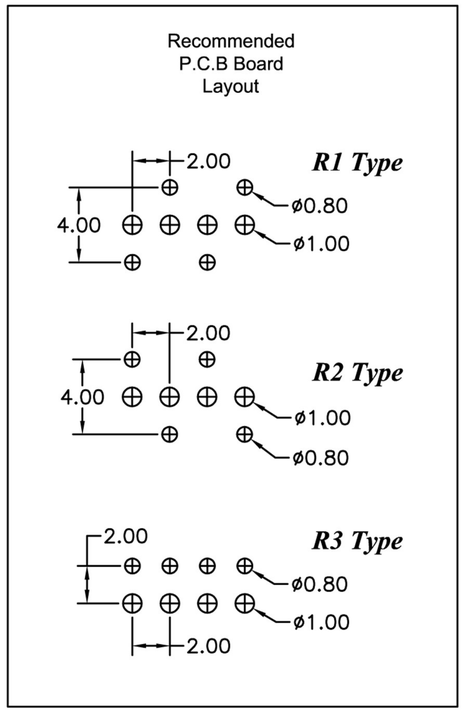


## Technical Data

Material:
Contact material: Phosphor bronze
Insulator material:Black polyester UL94V-0
Standard:PA6T+30%G.F

Electrical:
Current rating: 1.5Amps/contact max.
Contact resistance: ≤20mΩ/contact
Insulation resistance: ⩾1000MΩ at V=100V
Withstanding voltage:450V AC/minute

Mechanical:
Operating temperatures: Gold plated:-55° C to+105° C
Tin plated:-40° C to+105° C
Soldering temperature: +260° C,10s max.

| FGE2001 | - | U | XX | X | X | X | XX |
|---|---|---|---|---|---|---|---|
| | | | No. of Positions<br>02 to 40 | Plating Option<br>A G/F<br>B Au3μ"<br>C Au5μ"<br>D Au10μ"<br>E Au15μ"<br>S Special | Insulator Material Option<br>A BK-PBT<br>B BK-PA66<br>C BK-PA6T<br>D BK-PA46<br>F BK-LCP<br>S Special | Reflexed Type Option<br>A R1 Type<br>B R2 Type<br>C R3 Type | Pin Length (A)<br>01 2.8mm<br>02 3.0mm |

深圳平志电子有限公司
SHENZHEN PIZCONN ELECTRONIC CO.,LTD

Title: 2.00mm(0.0787")
Female Header Single Row Botoom Entry

Part NO: FGE2001

UNIT: mm

E-mail: ivan@pizconn.com.cn