REVISION DATA				
SYM	ECN	DESCRIPTION	DATE	APPROVED

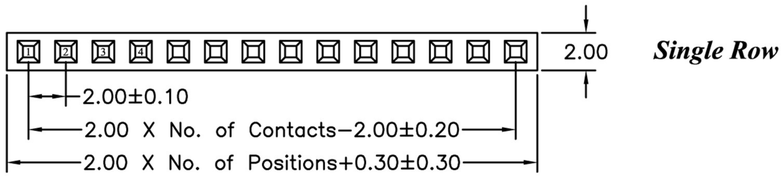

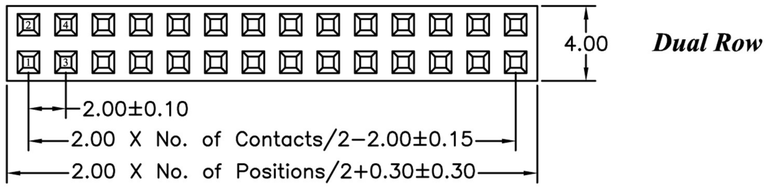

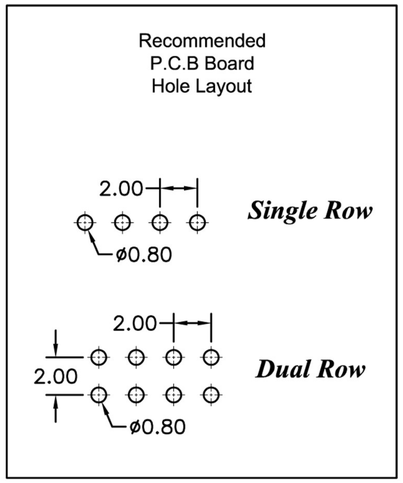

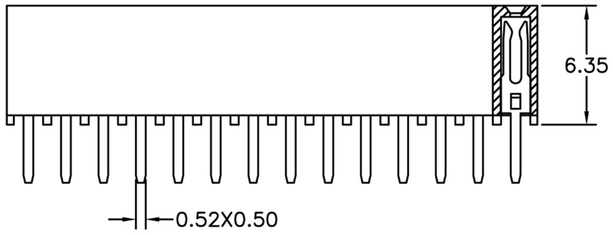

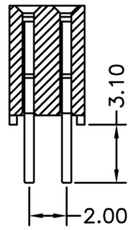

Dual Row

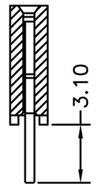

Single Row

Technical Data

Material:
Contact material: Brass
Insulator material:Black polyester UL94V-0
Standard:PBT+30%G.F

Electrical:
Current rating: 1.5Amps/contact max.
Contact resistance: ≤20mΩ/contact
Insulation resistance: ⩾1000MΩ at V=100V
Withstanding voltage:450V AC/minute

Mechanical:
Operating temperatures: Gold plated:-55° C to+105° C
Tin plated:-40° C to+105° C
Soldering temperature: +220° C,10s max.

FGA2003	X	630 -	Y	XX	X	X	A	XX
	Row Option 1 Single Row 2 Dual Row			No. of Positions 02 to 40 04 to 80	Plating Option A G/F B Au3μ" C Au5μ" D Au10μ" E Au15μ" S Special	Insulator Material Option A BK-PBT B BK-PA66 C BK-PA6T D BK-PA46 F BK-LCP S Special		Pin Length 01~99

深圳平志电子有限公司
SHENZHEN PIZCONN ELECTRONIC CO.,LTD

Title: 2.00mm(0.0787")
Female Header Single/Dual Row Straight Dip Type

Part NO: FGA2003

UNIT: mm

E-mail: ivan@pizconn.com.cn