REVISION DATA				
SYM	ECN	DESCRIPTION	DATE	APPROVED

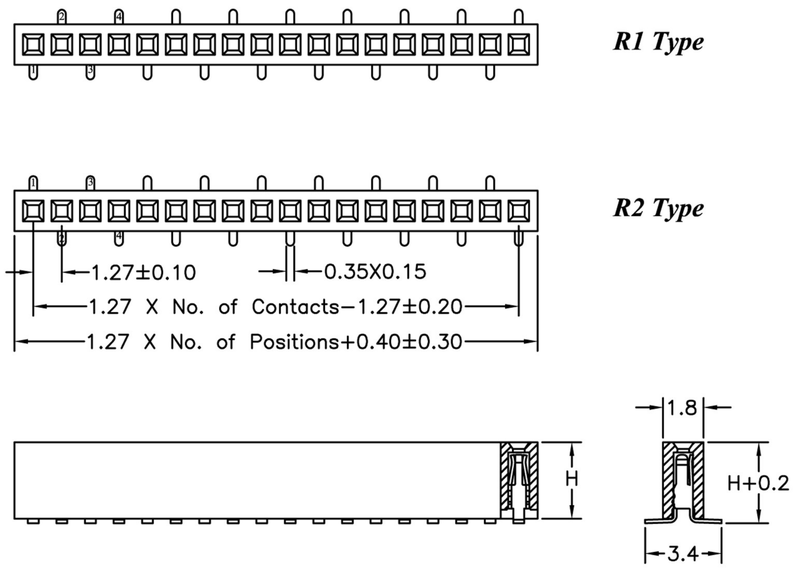

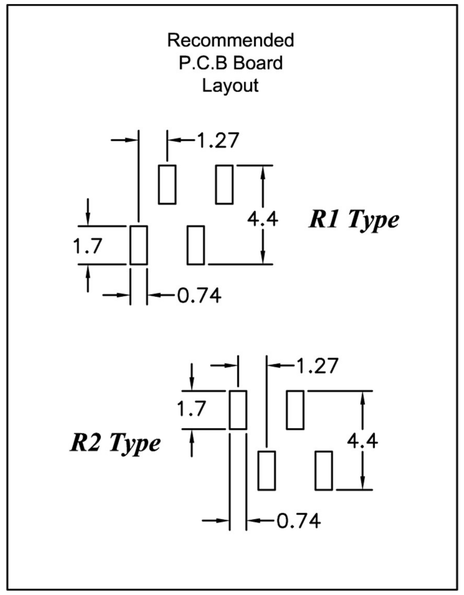

Technical Data

Material:
Contact material: Phosphor bronze
Insulator material:Black polyester UL94V-0
Standard:PA6T+30%G.F

Electrical:
Current rating: 1.0Amps/contact max.
Contact resistance: ≤20mΩ/contact
Insulation resistance: ⩾1000MΩ at V=100V
Withstanding voltage:300V AC/minute

Mechanical:
Operating temperatures: Gold plated:-55° C to+105° C
Tin plated:-40° C to+105° C
Soldering temperature: +260° C,10s max.

FCE1272	XX	0 - U	XX	X	X	X	XX
	High Option 34 H=3.4mm 44 H=4.4mm		No. of Positions 02 to 40	Plating Option A G/F B Au3μ" C Au5μ" D Au10μ" E Au15μ" S Special	Insulator Material Option A BK-PBT B BK-PA66 C BK-PA6T D BK-PA46 F BK-LCP S Special	Reflexed Type Option A R1 Type B R2 Type	Pin Length 01~99

深圳平志电子有限公司
SHENZHEN PIZCONN ELECTRONIC CO.,LTD

Title: 1.27mm(0.05")
Female Header Single Row S.M.T Type

Part NO: FCE1272

UNIT: mm

E-mail: ivan@pizconn.com.cn