REVISION DATA				
SYM	ECN	DESCRIPTION	DATE	APPROVED

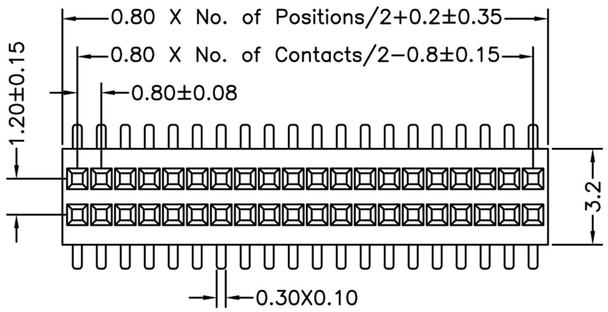

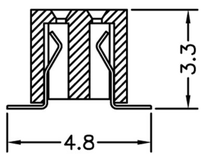

Type 1

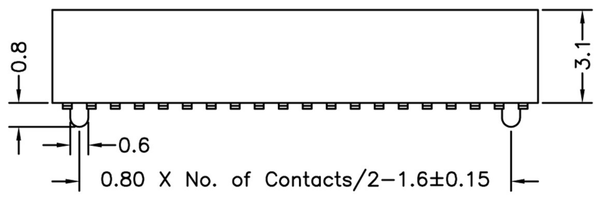

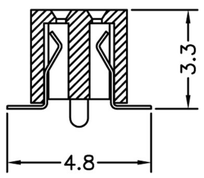

Type 2

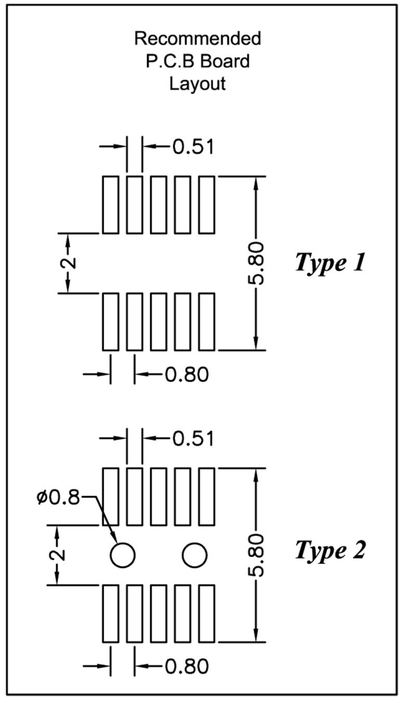

Technical Data

Material:
Contact material: Phosphor bronze
Insulator material:Black polyester UL94V-0
Standard:PA6T+30%G.F

Electrical:
Current rating: 0.5Amps/contact max.
Contact resistance: ≤20mΩ/contact
Insulation resistance: ⩾1000MΩ at V=100V
Withstanding voltage:300V AC/minute

Mechanical:
Operating temperatures: Gold plated:-55° C to+105° C
Tin plated:-40° C to+105° C
Soldering temperature: +260° C,10s max.

FDT080	-	U	XX	X	X	X	XX
			No. of Positions 04 to 80 06 to 80	Plating Option A G/F B Au3μ" C Au5μ" D Au10μ" E Au15μ" S Special	Insulator Material Option A BK-PBT B BK-PA66 C BK-PA6T D BK-PA46 F BK-LCP S Special	Post Type Option A Type 1 B Type 2	Pin Length 01~99

深圳平志电子有限公司
SHENZHEN PIZCONN ELECTRONIC CO.,LTD

Title: 0.80*1.20mm(0.031"*0.047)
Female Header Dual Row S.M.T Type

Part NO: FDT080

UNIT: mm

E-mail:ivan@pizconn.com.cn