REVISION DATA				
SYM	ECN	DESCRIPTION	DATE	APPROVED

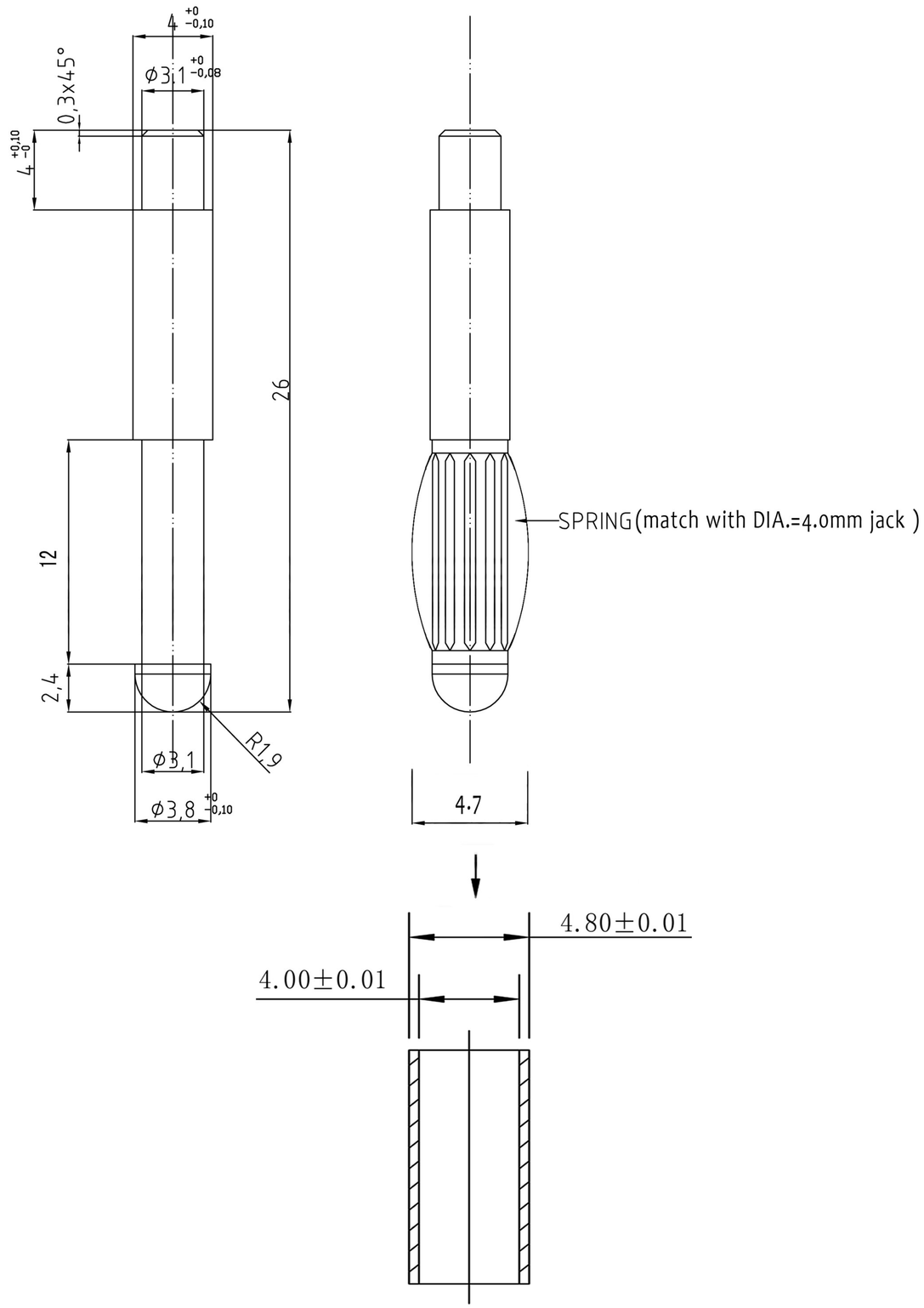

Plugs:

Materials: brass and CuZn36Pb3
Plating: Ni-plated 2μm (80μ-inch) and 5μm (200μ-inch)
Materials: brass and CuZn36Pb3

Crown spring:

Materials: QBe2.0+heat treatment HV330-390
Plating: G/F

深圳平志电子有限公司
SHENZHEN PIZCONN ELECTRONIC CO.,LTD

Title: K4# CROWN SPRING PLUGS 4.0mm

Part NO: PNG402326

UNIT: mm

E-mail: ivan@pizconn.com.cn